Fundamental Concept of Equipment Economics

Equipment cost can be classified to:

Ownership Cost	Operating Cost
Purchase Expenses	Fuel
Salvage Value	Lubricants, Filters , and Grease
Major repairs and overhauls	Repairs
Property Taxes	Tires
Insurance	Replacement of high – wear items
Storage and miscellaneous	

- Purchase expense (out flow) delivered cost (options, shipping, taxes, less cost of tires) it's fixed asset.
- Major repairs:- It is repair to extension of machine's services life.
- Taxes up to 4.5 % of assessed machine value (property taxes) percentage of book value of machine.
- Insurance ; (1-3)% of book value or AAI (fire, damage)
- Storage (0-5)% (include spare rental, utilities wage of laborers and watch them)
- Taxes, insurance and storage = rate (%) × B.V. (or A.A.I) portion of ownership.

Depreciation

1- Average Annual Interest Method (A.A.I)

$$A.A.I. = \frac{P\,(n+1) + S\,(n-1)}{2n}$$

Where;

P: Purchase price less the cost of Tire

S: the estimated salvage value

n: expected service life in the years

$$Dep. = \frac{P-S}{NO.\ hr./year} + \frac{A.A.I \times C.C\%}{hr./year}$$

$$Dep. = \text{Straight Line Dep. / hr.} + \frac{A.A.I \text{ X Cost of Capital}}{NO.\text{of hr. / year}}$$

$$\textbf{1- Cost of Money} = \frac{\textbf{A.A.I X Cost of Capital}}{\textbf{NO.of hr. /year}}$$

2- Time Value Method

$F = P\,(1+i)^{n}$ ⟹ Single Payment Compound Amount Factor (SPCAF)

$P = \frac{F}{(1+i)^{n}}$ ⟹ Present Worth Compound Amount Factor (PWCAF)

$F = A\,[\frac{(1+i)^{n}-1}{i}]$ ⟹ Uniform Series Compound Amount Factor (USCAF)

$A = F\,[\frac{i}{(1+i)^{n}-1}]$ ⟹ Uniform Series Sinking Fund Factor (USSFF)

$P = A\,[\frac{(1+i)^{n}-1}{i(1+i)^{n}}]$ ⟹ Uniform Series Present Worth Factor (USPWF)

$A = P\,[\frac{i(1+i)^{n}}{(1+i)^{n}-1}]$ ⟹ Uniform Series Capital Worth Factor (USCWF)

Example 1: A machine cost $ 45,000 to purchase fuel, oil, grease (FOG) and minor maintenance is estimated to cost $ 12.34 per operating hr. A set of tires cost $ 3,200 to replace, and their estimated life is 2,800 use hours, $ 6,000 major repair will expect to last for 8,400 hr. which will be sold at price equal to 10% of the original purchase price. A final set of new tires will not be purchased before the sale. How much should the owner of machine change per hour of use, if it is expected that machine will operate 1,400 hours / year, the company 'cost of capita rate is 7%.

Solution

$n = \frac{8,400}{1,400} = 6$ years.

Cost without tires = 45,000 -3,200= $ 41,800

A ownership = $ 41,800 $[\frac{i(1+i)^{n}}{(1+i)^{n}-1}]$ = $ 41,800 $[\frac{0.07(1+0.07)^{6}}{(1+0.07)^{6}-1}]$

= \$ 41,800× 0.209756 =\$ 8,769.46

Salvage Value =45,000 × 0.1= \$ 4,500

A salvage = \$ 4,500 $[\frac{i}{(1+i)^n - 1}]$ = \$ 4,500 $[\frac{0.07}{(1+0.07)^6 - 1}]$

= 4,500× 0.139796 = \$ 629.08

Annual FOG = 12.34 × 1,400= \$17,276

A major repair = $[\frac{6,000}{(1+0.07)^3}] \times [\frac{0.07(1+0.07)^6}{(1+0.07)^6 - 1}]$ = \$ 1,027.54

A tires = $[3,200+\frac{3,200}{(1+0.07)^2} + \frac{3,200}{(1+0.07)^4}]\times[\frac{0.07(1+0.07)^6}{(1+0.07)^6 - 1}]$= \$ 1,769.89

A total = 8,769.46 – 629.08 + 1,769.89 + 1.027.54= \$ 28,213.81

Total Cost = $\frac{28,213.81}{1,400}$= \$ 20.153 / hr.

Example 2: calculate the ownership cost of a loader machine purchased price \$ 300,000 and has an expected service life 4 years and will be utilized 2,500 hrs. per year. The tires on this machine cost \$ 4,500. The estimated salvage value at the end of 4 years is \$ 50,000. The company pays an average 1% in property taxes for equipment 2% insurance and allocates 0.75% for storage expenses. Cost of capital rate of company is 8%.

Solution

1- Depreciation will calculate on the basis of
   a- Time Value Method
   b- Average Annual Interest Rate Method
2- Purchase price less tires = Initial cost – cost of tires
   =\$ 300,000 – \$ 45,000= \$ 255,000\$

A= \$ 255,000 $[\frac{0.08\ (1+0.08)^4}{(1+0.08)^4 - 1}]$ = \$ 255,000 × 0.3019208 = \$ 76,990 per year

A = \$ 50,000 $\frac{0.08}{(1+0.08)^4 - 1}$ = \$ 50,000 × 0.2219208 = \$ 11096 per year.

3- Depreciation Time Value = $\frac{76,990-11,096}{2,500}$ = $ 26.358 / hr.

A.A.I.R= $\frac{255,000\ (4+1)+\ 50,000\ (4-1)}{2\times4}$ = $178,125 / hr.

Cost of money portion = $\frac{17,8125 \times 0.08}{2,500}$ = $ 5. 6 / hr.

Straight Line Depreciation = 300,000- 45,000 – 50,000= $ 205,000

$\frac{205,000}{4\ yr.\ \times 2,500}$ = $ 20.5 / hr.

Depreciation = 5.700+20.5= $ 26.2 /hr.

4- Total Percentage Rate for Taxes, Insurance and Storage is:-

0.01 + 0.02 + 0.0075= 0.0375

- Taxes, Insurance & Storage Costs are

$\frac{0.0375 \times \$\ 178.125\ /\text{year}}{2,500\ \text{hr/year}}$ = $ 2.672 / hr.

5- Total Ownership Cost = 26.358+ 2.672= $ 29.03 / hr.

Example 3: - A company having a cost capital rate 8% purchases a $ 300,000 loader. This machine has an expected services life of 4 years and will be utilized 2,500 hrs/year. The tires on this machine cost $ 4,500. The estimated salvage value at the end of 4 years is $ 50,000. Calculate the depreciation portion of ownership cost for machine (disregard the tires).

Solution

Purchase price less tires =$ 300,000 – $ 45,000= $ 255,000$

A= $ 255,000 [$\frac{0.08\ (1+0.08)^4}{(1+0.08)^4\ -1}$] = $ 255,000 × 0.3019208 = $ 76,990 per year

A = $ 50,000 $\frac{0.08}{(1+0.08)^4\ -1}$ = $ 50,000 × 0.2219208 = $ 11096 per year.

Ownership Cost = $\frac{76,990-11,096}{2,500}$ = $ 26.358 / hr.

A.A.I.R= $\frac{255,000\ (4+1)+\ 50,000\ (4-1)}{2\times4}$ = $ 178,125 / hr.

Cost of money portion = $\frac{17\ 8,125 \times 0.08}{2,500}$ = $ 5. 7 / hr.

Straight Line Depreciation Portion = 300,000- 45,000 – 50,000= $ 205,000

$\frac{205,000}{4\ yr.\ \times 2,500}$ = $ 20.5 / hr.

Total ownership depreciation using A.A.I.R Method

= 5.7 +20.5= $ 26.2 / hr.

A.A.I.R= $\frac{41,800\ (6+1)+\ 45,000\ (6-1)}{2\times6}$ = $ 26,258 / hr.

Cost of money = $\frac{26,258 \times 0.07}{1,700}$ = $ 1. 31291 / hr.

Initial Cost = $\frac{45,000-4,500}{6\times1,400}$= $ 4.821

Major repair = $\frac{6,000}{3\times1,400}$ = $ 1.428

Tires = $\frac{3,200}{2\times1,400}$= $ 1.143

Annual FOG = $\frac{17,276}{1,400}$ = $ 12.34

Operating Cost:-

The operating cost consists of followings:-

1- Fuel
2- Lubricants, Fillers & Grease
3- Repairs
4- Tires
5- Replacement of high –wear items

6- Operator wages are some time included under operating cost direct wage, fringe benefits, insurance …….. etc.

Fuel cost: It determined by measurement on the job

Accurate Services Record: tell owner how many gallons of fuel a machine consume over what period of time and under what job conditions

The estimated amount of fuel required depend upon brake horsepower and specific work specification

Theoretical basis: adjusted by time and load factors

Gasoline engine consumes 0.06 gal. of fuel / flywheel horsepower / hr.

Diesel engine consumes 0.04 gal. of fuel / flywheel horsepower / hr.

Lubricants – Lube cost oil, Filter, and Grease

It depends on maintenance of the company and conditions of the work location.

Some factors like:-

1- Follow machine manufacture's guidance concerning time period between lubricant and filter change.
2- Others have established their own preventive maintenance charge period guideline.

Hourly cost arrived by:-

1- Considering the operating hour duration between changes and quantity required for a complete change.
2- A small consumption amount representing what is added between changes.

Manufactures period quick cost estimating table or

$$\text{Rule quantity consumed (g ph)} = \frac{hp \times f \times 0.006\ (Ib/hp.hr)}{7.4\ Ib/gal} + \frac{C}{t}$$

Where:

hp: Rated horsepower of the engine

f: Operating factor

C: Capacity of crank case in gallon

t: number of hours between oil change

Power Crane and Shovel Association (PCSA)

Repair & Maintenance of Depreciation

80% - 95% of power Crawler – mounted Excavator

80% - 85 % Wheel- mounted Excavator

55 % Crawler Crane

50% Wheel mounted Crane

Percentage of Total cost % Breakdown of machine cost over its service life

Repair 37%

Depreciation 25%

Operating 23 %

Overhead 15%

$$\text{Repairs Calculated} = \frac{\text{Total Expected Repair Cost}}{\text{Planned Operating Hours}}$$

Tires: it major operating cost because has short life

Caterpillar 2008 ------ 3000 ~ 6000 hr.

1,000~ 2000 hr. / sharp rock or over load.

Operating Cost

Example 4:- calculate the operating cost of a 220 fwhp dozer diesel powered use to push aggregate in stockpile. It is estimated that the work will be steady at efficiency equal to a 50 – min hour. The engine will work at full throttle to reverse travel & position.

- Diesel cost $ 1.07 / gal.
- Crank case capacity is 8 gal.
- Oil Lubricant price is $ 17.3 / gal.
- Company has a policy to change the Oil every 150 hr.
- Tires cost $ 38580 per set of four.
- A set of tire expected to last 5,000 hr.
- Estimated average of tire repair cost is 16% of straight line (S.L) tire depreciation
- Company 's cost of capital rate is 8%
- Actual ripping will take place about 20% of total dozer operating time
- Ripper shank consists of shank itself, a ripper tip, & shank protect.
- Ripper shank protector is 3 times tip life and $ 60 price.

Solution

1- Fuel cost : operating factor (Throttle load factor)
Push load 100 % × 0.3 of time = 0.3
Travel & position 75% × 0.7 = 0.53

0.83

Time factor (operating efficiency) 50 min : 50/ 60= 0.83
Combined factor operating factor = 0.83 × 0.83= 0.69
Fuel consumption = 0.69 × 0.04 gal./ fwhp / hr. × 220 fwhr. = 6.1 gal / hr.
Cost of Fuel = 6.1 gal / hr. × $ 1.07 / gal.= 6.52 $ / hr.

2- Lubricant cost :-

$$\text{Consumption} = \frac{hp \times f \times 0.006\ (Ib/hp.hr)}{7.4\ Ib/gal} + \frac{C}{t}$$

$$= \frac{220\ fwhp \times 0.69 \times 0.006\ (Ib/hp.hr)}{7.4\ Ib/gal} + \frac{8\ gal}{150}$$

= 0.18 gal / hr.

Lubricant cost = 0.18 ×17.3= 3.114 $ / hr.

3- Tires cost: - tires use cost = $\frac{38,580}{5,000}$ = $ 7.716 / hr.
Tires repair cost = 7.716 × 0.16 = $ 1.235 / hr.

Tires operating cost is $ 8.951 / hr.

4- Tips:- time of replace from dozer operating time = $\frac{30}{0.2}$ =150 hr.

$\frac{3 \times \$\ 60}{450}$ = $ 0.4 / hr. for shank protector
Cost of high wear item is $ 1.2 / hr.
Total operating cost = 6.52 + 3.114 + 8.951 +1.2 = 19.721 $ / hr.

Example 5:- A 220 fwhp dozer will be used to push aggregate in stockpile, the dozer is diesel powered. It is estimated that the work will be steady at efficiency equal to a 50 min- hour. The engine will work at full throttle will pushing the load (30% of time) and at three –quarter throttle & reverse travel and position the crank case capacity is 8 gal. and the time between two changes of oil is 150 hrs. ---------- cost of the set price of oil is $ 3 / gal. Tires are 38580 for 5000 hrs. ever the estimated repair cost is 16%. The machine has a service life 4 years and operating 2500 hrs. / year. The cost of capital is

8%. Calculate the operating cost if cost of oil is $ 15 / gal. and fuel $ 3 / gal. Throttle load factor (operating power).

Solution

Push load 1.0 power × 0.3 (% of time) = 0.3

0.75 × 0.7 = 0.53

0.83

Time factor (operating efficiency) 50 min – hr.

Compound factor = 0.83 × 0.83= 0.69

Fuel consumption = 0.69 × 0.04 gal. fwhp ×220 hp = 6.1 gal. / hr.

❖ cost of fuel = 3 × 6.1 = $ 18. 3 / hr.

Oil cost = $[\frac{220 \text{ fwhp} \times 0.69 \times 0.006 \text{ (Ib/hp.hr)}}{7.4 \text{ Ib/gal}} + \frac{8 \text{ gal}}{150}] \times 15 = \$ 2.65$ / hr.

Tire repair cost = $\frac{38{,}580}{5{,}000} \times 0.16 = \$ 1.235$ / hr.

Tire use cost = $\frac{38{,}580}{5{,}000} = \$ 7.716$ / hr.

❖ Tire operating cost = 1.235 + 7.716 = $ 8.951 / hr.

Time Value Method

NO. of Set = $\frac{4 \text{ x } 2{,}500}{5{,}000} = 2$ set

$P = \frac{38{,}580}{(1+0.08)^2} = 33{,}076$

$A_1 = 38{,}580 \left[\frac{0.08\ (1+0.08)^4}{(1+0.08)^4 - 1} \right] = \$ 11{,}648.11$ / year.

$A_2 = 33{,}076\ [\frac{0.08\ (1+0.08)^4}{(1+0.08)^4 - 1}] =$ \$ 9,986.34 / year.

❖ Cost of tires = $[\frac{11{,}648.11 + 9{,}986.34}{2{,}500}] \times 1.16 = 8.653 \times 1.16 =$ \$ 10.03 / hr.

Cost = $[\frac{11{,}648.11 + 9{,}986.34}{2{,}500}] + 1.235 = 8.653 + 1.235 =$ \$ 9.889 / hr.

<u>Example 6</u>:- A dozer required with a three shank ripper will be used in a loading and ripping application actual ripping will take place only about 20% of total dozer operating time. A ripper shank consists of the shank itself, a ripper tip and a shank proctor, the estimated operating life for ripper tip is 30 hrs. and for ripper shank is 3 times tip life. The local price for a tip is \$ 40 and \$ 60 for shank proctor.

Tips**.**

NO. of operating hours of tips = $\frac{30}{20\%} = 150$ hrs.

$\frac{3 \times \$40}{150} =$ \$ 0.8 / hr. for tip

Shank proctors ⟹ 3 x 150 = 450 hrs. (3 times life tip)

$\frac{3 \times \$60}{450} =$ \$ 0.4 / hr. for shank proctor

❖ cost of high wear item is = 0.8 + 0.4 = \$ 1.2 / hr.

❖ The total operating cost = 6.1+ 2.65+ 8.95+ 1.2= \$ 18.9 / hr.

<u>Mobile Equipment Power Requirement</u>

The power requirement is established by two factors

1- Rolling Resistance

The resistance of a level surface to constant Velocity motion across it

2- Grad Resistance

The force – opposing movement of a machine up a friction slop

To define the machine performance: - three types of power must examine:

1- Required power (RR+ GR)
2- An available power; Rimpull – Drawbar Pull.
3- Usable power; Coefficient of Traction + Attitude effect.

Required power: - is the power needed to overcome resisting force and crawler machine motion there force. It is the power necessary to overcome the total resistance (Rolling + Grade) for machine movement.

Rolling Resistance:- It is sometimes referrers to as wheel resistance or track resistance , it result from :-

1- Fraction of Driving Mechanism
2- Tire Flexing
3- The Force required to shear through or ride over the supporting surface.
[Tire size – pressure on – tread design – type and condition of road surface (soft or hard) – climatic condition- maintain –compacted – moisture condition]
To compute the Rolling Resistance use the following rule:

$$R = \frac{p}{w}$$

Where:
R: Rolling Resistance in Pound per Ton
P: Total tension in tow cable in Pound
W: Gross weight of mobile vehicle in Ton
Grade Resistance: surface rise, the slope is defined as plus. Whereas if it drops, the slope is defined as minus.
It is acts against the total weight of machine. For the slopes than 10%, the effect of grade is to increase for plus slope or decrease for a minus slope the required tractive effort by 20 Ib per gross ton of machine weight for each 1% grade.
F = 20 Ib / ton x G%

Tires

The selection of tires sizes and the practice of maintaining correct air pressure in the tires will reduce the portion of the Rolling Resistance.
If the load on a tire is 5,000 Ib. and air pressure is 50 psi the area of contact will be 100 sq.in.
If 40 psi the area will be 125 sq.in. $\frac{5,000}{100} = 50\ in^2$ and $\frac{5,000}{40} = 125\ in^2$.
The selected tire and the inflated pressure should be based on the resistance to penetration by tire. Fair can be traced to constant over load, excess in speed incorrect tire selection and poorly maintained haul road.

- Over intation subjects the tire to excessive wear in the center of the tread.
- Mismatched dual will cause unequal weight distribution overloading on the larger tire

TMPH "Ton – Miles – Per – Hour limit"

TMPH = Average tire load × Average Speed during a day's Operation.

$$\text{Average tire load (ton)} = \frac{\text{Empty tire load (ton)} + \text{Loaded tire load (ton)}}{2}$$

$$\text{Average Speed (mph)} = \frac{\text{Round trip distance (miles)} \times \text{Number of trips}}{\text{Total hours worked}}$$

Example 7: A four wheel tractor whose operating weight is 48,000 Ib is pulled up a road whose slope is + 4% at uniform speed. If the average tension in towing cable is 4,680 Ib, what is the rolling resistance of the road?

Solution

The required force for Grade = W× G× 20 = 48,000

$$= \frac{48{,}000}{2{,}000} \times 4 \times 20 = 1{,}920$$

- the available force for R.R = 4,680 – 1920= 2,760 Ib.
- the required force for R.R = 2,700 = R.R × W $(\frac{48{,}000}{2{,}000})$
- R.R. = $\frac{2{,}760}{24}$= 115 Ib / ton

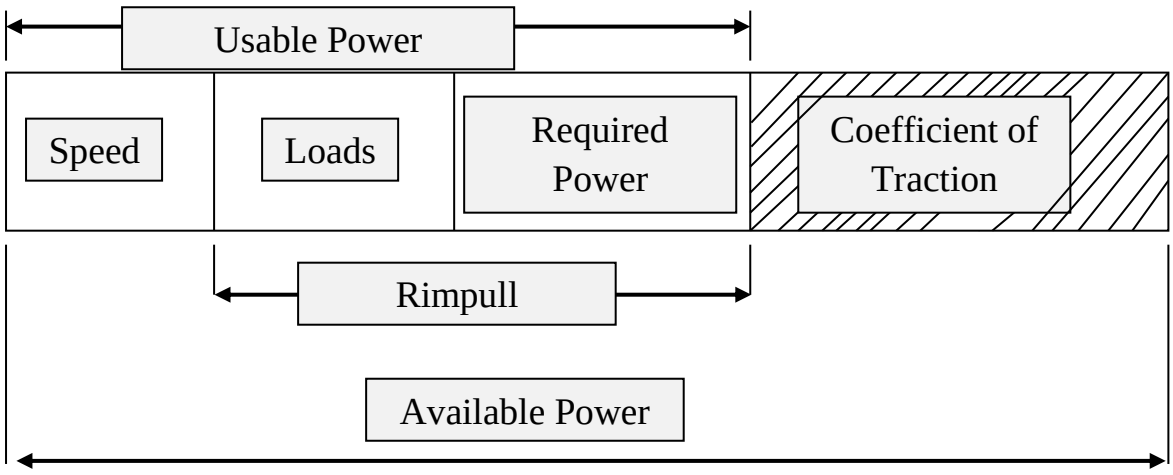

Available Power: Most of construction equipment are diesel engines where diesel engines perform better than gasoline under heavy – duty applications, additionally; diesel engines longer service life and lower fuel consumption with less of a fire hazard.

Example 8; A 180- Ib horse power walks in a circular path operating a pump that rises water from mine. The horse is hitched to 12- ft lever arm that connected to the pumping mechanism. The horse makes 144 revolutions (rev) per hour. How much work does the horse do in 1 one hour?

Solution

Circumference = 2 × π × radius = 2 × π × 12 ft = 75.4 ft

Total distance moved = 75.4 ft × 144 rev = 10,857 ft

Work = 180 Ib (force) × 10,857 ft (distance) = 1,954.320 Ib –ft / hr.

Watt defined power as amount of work that can be done in certain amount of time as power = $\frac{\text{Work}}{\text{Time}}$

Power of a horse = $\frac{195432 \text{ Ib}-\text{ft /hr}}{60 \text{ min/hr}}$ = 32,572 Ib-ft / min

≈33,000 Ib-ft / min or (550 Ib-ft /sec)

James Watt developed the first practical steam engine by related it do horse that used to power pumping apparatuses used in mines across erylard

Performance Charts:

Equipment manufacture publish performance charts for individual machine models to enable the equipment estimator / planner to analyze machine's ability to perform under a given set of project – imposed load conditions.

Performance chart is a graphical representation of power and corresponding speed the engine and transmission can deliver the load condition is stated as either rimpull or drawbar pull.

Required Power – Total Resistance

1- Ensure that the proposed machine has the same engine, gear ratios and tire size as identified for machine on the chart.
2- Estimate the rimpull (power) required
3- Locate the power requirement value on the left vertical scale and project a line horizontally to right intersection a gear curve.

4- Project a line vertically to bottom X- axes which indicates the speed in mile / hr. or meter / hr.

Effective Grade – Total Resistance

1- Ensure that the proposed machine has the same engine gear ratios and tire size as those identified for machine on the chart.
2- Determine the machine weight both with empty and loaded.
3- Calculate the total resistance; then find intersection point of the vertical vehicle weight projection and appropriate total resistance diagonal.
4- The gear curve defines horizontally from point on intersection.
5- Project vertically from intersects the gear nary curve to bottom of X- axes to indicate the machine speed.

Available Power:-

Rimpull: Rimpull is the tractive force between the tires and machines driving wheels and the surface on which they travel.

$$\text{Rimpull} = \frac{375 \times \text{hp} \times \text{effeciency } (0.8-0.85) \approx 0.85}{\text{Speed}}$$

Maximum effect rimpull related to coefficient of traction which equal to the total pressure the tires exert on surface multiplied by coefficient of traction.

Example: 9 Calculate the rimp-ull of a pneumatic –tired truck (7.7 ton) with 180 hp engine and the operating speed in second gear 6.7 mile / hr.? If the truck moving on 2% grad road and 120 Ib / hr. How much the power available to towing other load R.R?

Solution

$$\text{Rimpull} = \frac{375 \times 180 \times 0.85}{6.7} = 8{,}563 \text{ Ib}$$

T.R= 120 × 7.7 + 7.7 × 2 × 20 = 924+ 308 = 1,232

❖ Power available for loads = 8,563 – 1,232= 7,331 Ib.

Drawbar pull it is the available pull that crawler tractor can exert on a towed load.
It is usually based on the Nebraska test which calculate the maximum Drawbar pull on road having 110 Ib / ton (Rolling Resistance).

Example 10: A track –type tractor whose weight is 15 ton has drawbar pull of 6,512 Ib in fifth gear when operated on the level road having rolling resistance of 110 Ib/ton . if the tractor operated on road having a rolling resistance of 180 Ib / ton and 4% grade ? Calculate the available power?

Solution

Available power = 6,215 – [(16 x(180 -110) + 16 x4x20)] = 4,112 Ib

Example 11: A tractor proposed to use scraper on the embankment job. The performance characteristics of machines are shown in figure 6.10 and figure 6.12 the scraper has rated capacity of 14 cy struck. Operating weight empty is 69,000 Ib, the weight distribution of the scraper when loaded is 53% on the drive wheel.
The contractor believes that average scraper load will be 15.2 bcy. The haul from the excavation area is a uniform adverse gradient of 5% with rolling resistance of 60 Ib / ton the material to be excavated and trans ported is a common earth with bank unit weight of 3,200 Ib / bcy.
Calculate the maximum travel speed that can be expected?

Solution

Machine weight = 69,000 + 15.2 × 3,200 = 117,640 Ib

Total resistance = $\frac{60}{2,000}$ + 5% = 8%. Figure 6.10 ⟹ speed 11 mile / hr.

(Loaded haul)

Total resistance = $\frac{60}{2,000}$ - 5% = -2 %. Figure 6.12 ⟹ speed 31 mile / hr.

(Empty return)

Figure (6.10) ⟹ the speed is 11 mile / hr.

UABLE POWER: Usable Power depends on project conditions:-

Haul –road, surface condition, altitude, and temperature.

Coefficient of Traction:- It is the factor by which the total weight on drive wheels or tracks should be multiplied to determine the maximum possible tractive force between the wheels or track and the surface just before slippage will occur.

Usable force = Coefficient of Traction × Weight on Powered Running Gear

Example 12: What maximum possible rimpull prior to slippage of tires hauling and return? If the required weight 22,000 Ib and its capacity 14 cy loaded with soil 2,750 Ib / cy the available power is 7,500 Ib the equipment used on two types of road (dry clay loam – wet sand and gravel) the weight be conservation 52% of load is on drive wheels?

Solution

Hauling Case:-

Gross weight = 27,000 + 14 × 27,500 = 60,500 Ib

1- Maximum possible rimpull = 0.5 ×60,500 × 0.52= 15,730 Ib and this is > 7,500 Ib Prior slippage

- use maximum 7,500 Ib

2- Maximum possible rimpull = 0.3 ×60,500 × 0.52= 9,438 Ib and this is > 7,500 Ib Prior slippage road 2

- use maximum 7,500 Ib

Return Case:-

1- Maximum possible rimpull = 22,000 ×0.52 × 0.5= 5,720 Ib and this is < 7,500 Ib Prior slippage

- use rimpull 5,720 Ib

2- Maximum possible rimpull = 22,000 ×0.52 × 0.3= 3,432 Ib and this is < 7,500 Ib Prior slippage road 2

- use rimpull 3,432 Ib

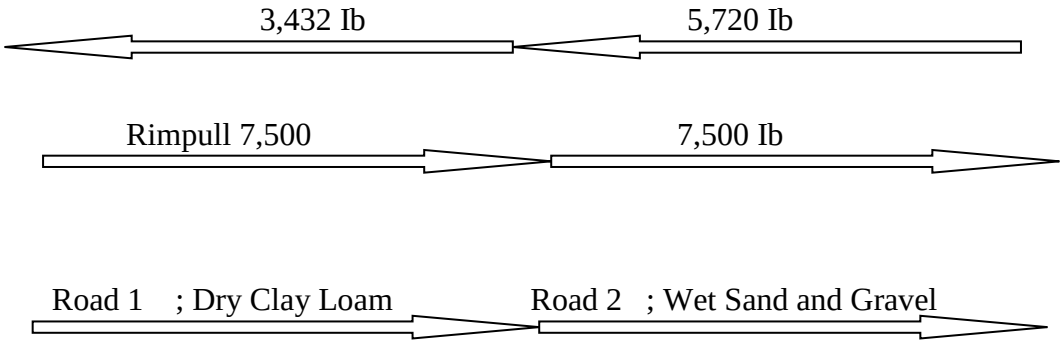

Volumetric Measure: - volumetric measure varies with the material position in the construction process the same weight of a material will occupy different volume as the material is handled on project.

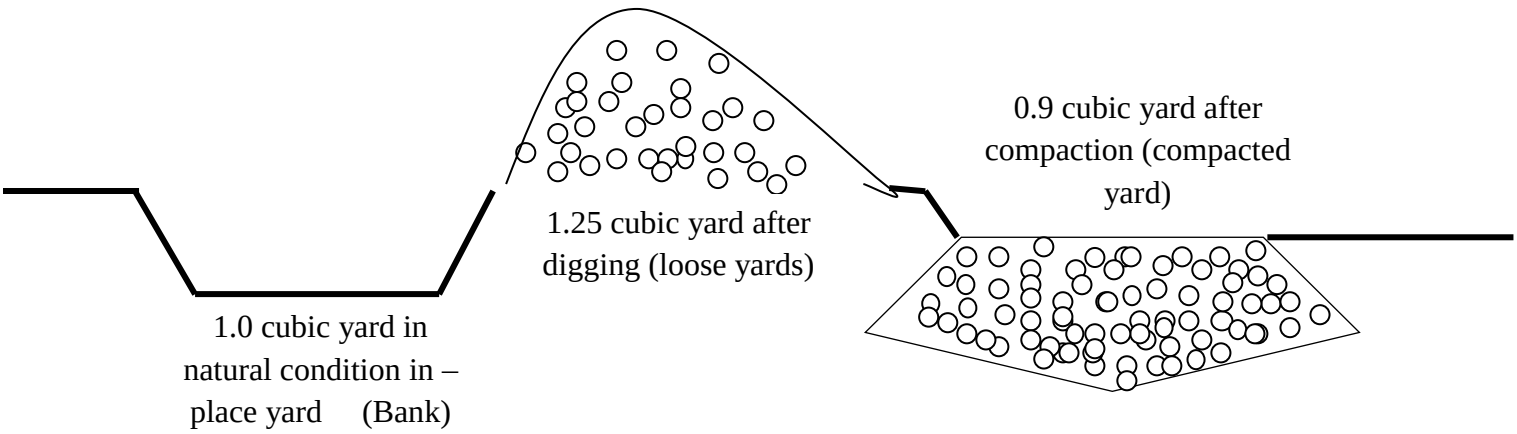

Figure disrobes the major soil states

Most cohesive soils will shrink (10%- 30%) from bank state to compacted state.
Solid rock will swell (20%- 40%) from bank state to placement embankment.
In planning or estimating job, the engineer must use a consistent volumetric measure in any set of calculation. The necessary consistency of units is achieved by use of shrinkage and swell factors.
Shrinkage Factor: is the ratio of compacted dry weight per unit volume to the bank dry weight per unit volume.
Swell Factor: is the ratio of a loose dry weight per unit volume to the bank dry weight per unit volume.

$$\text{Shrinkage Factor} = \frac{\text{Compacted unit Weight}}{\text{Bank dry unit Volume}}$$

$$\text{Shrinkage Percent} = \frac{(\text{Compacted unit Weight} - \text{Bank unit weight})}{\text{Compacted unit Weight}} \times 100\%$$

$$\text{Swell Factor} = \frac{\text{Loose dry unit Weight}}{\text{Bank unit Weight}}$$

$$\text{Swell Percent} = \frac{(\text{Bank dry unit Weight} - \text{Loose dry unit weight})}{\text{Loose dry unit Weight}} \times 100\%$$

Example 13: If the earth is placed in fill site (890 ×110) yard at the rate of 200 CCY / hr. and the unit weight compacted, bank and loose (2,890- 2,590 and 2,390) Ib / Cyd respectively. Compute the followings

a- The rate of fill in loose?

b- The no. of trips if the haul track capacity 14 cyd and intended thickness 1.0 ft 1.4 yrd?

Solution

Shrinkage Percent = $\frac{(\text{Compacted unit Weight} - \text{Bank unit weight})}{\text{Compacted unit Weight}} \times 100\%$

Shrinkage Percent = $\frac{(2{,}890 - 2{,}590)}{2{,}890} \times 100\% \approx \%10$

Swell Percent = $\frac{(\text{Bank dry unit Weight} - \text{Loose dry unit weight})}{\text{Loose dry unit Weight}} \times 100\%$

Swell Percent =$(\frac{2{,}590}{2{,}390} - 1) \times 100\% \approx \% 8$

❖ C = B (1 - Sh) $\Longrightarrow$ B = $\frac{200}{0.9}$= 222.2 cy / hr.

L = B (1 + SW) $\Longrightarrow$ L = $\frac{200}{0.9} \times 1.08 = 222.2 \times 1.08 = 240$ cy / hr.

Volume = 890 × 110 × 1.4 = 137,060 cy.

B= $\frac{137{,}060}{0.9}$ = 152,288.9 cy

L = 152,288.9 × 1.08 = 164,472 cy.

No. of trips =$\frac{164{,}472}{14}$ = 11,748 trips.

Soil Processing

Adding Water to Soil

When it necessary to add water to soil the following points should be considered:-

- Amount of water required
- Rate of water application
- Method of application
- Effects of climate and weather

Amount of water required:-

Amount of water required (in Gallon)

$$= \text{desired dry density (pcf)} \times \frac{(\text{desired water content \%}) - (\text{water content borrow \%})}{100} \times \frac{\text{Compacted Vol.of soil (cf)}}{8.33 \text{ Ib per gal.}}$$

Application rate
(Gallon per square yard)

$$= \text{desired dry density of soil (pcf)} \times \frac{\text{\% moisture added or removed}}{100} \times \text{lift thickness (ft) (compacted)} \times \frac{9 \text{ sf /sy}}{8.33 \text{ Ib per gal.}}$$

Application Method:-

- ***Water distributor***
- ***Ponding***
- ***Reducing the Moisture Content :***

  Excess water makes achieving the desired density very difficult. Some steps must be taken to reduce the moisture content

  a- Aerating the soil (Drying action)
  b- Adding soil stabilization agent
  c- Subsurface derange
  d- Scarify the soil prior to compaction (most common)

  Effect of Weather

  Cold, rain and cloudy weather will allow a soil to retain water.
  Hot, dry, sunny and windy is conductive to drying soil.
  In desert project; the engineer might have to go as high 6% above the optimum moisture content.

Example 14:An embankment is to be constructed at a 12% moisture content. Material will be placed at the rate of 270 ccy / hr. The specified dry weight of compacted fill is 2,900 Ib / cy. How many gallons of water must be supplied each hour to increase the moisture content of the material from 7% to 12% by weight?

Solution:

$$\text{Gallons} = \frac{2{,}900}{27}\text{pcf} \times \frac{12\% - 7\%}{100} \times \frac{270 \times 27}{8.33} = 107.4 \times 0.05 \times 875.1 = 4{,}700 \text{ gallons.}$$

BULLDOZER

Blades: The common earth moving blades

1- The straight blades (S): for short and medium distance passes, backfilling, grading and spreading fill material.
   -no curvature – infixed position – for heavy duty 10° tilted-
2- Angle blades (A): Wider than (S) 1-2 ft - angled up 25° lift or right
   It may be tilted / for side casting material – make sidehill cuts.
3- Universal blades (U) : wider than (S) long dimension outside edges – canted forward about 25°- reduce the spillage of loose material effective moving large loads are large distance.
4- Semi – (U) blades (SU): this combines the characteristics of (S) and (U) blades design with addition short wings to increase capacity.
5- Cushion blades (C) : cushion mounted on large dozers that are used primarily for push – loading scrapers. C shorter than S to avoid pushing blade into and cutting the rear tires- shorter + rubber cushion and springs.

Project Employment

- Stripping
- Backfilling
- Spreading
- Slot dozing
- Blade to Blade dozing

Pneumatic tired Rollers with Variable Inflation Pressure

Tow pressure tire the increase pressure

- Adjust the pressure in the tires
- Vary weight of the ballast on the roller
- Keep rollers of different weight and pressure on project.

Towed Impact Compactor:-

1949 in South Africa (square wheels) 3-4-5 face drums.

Compaction Wheels

To avoid hazards of having men works in excavation of limited dimensions- backfilling utility trenches – it either sheep foots or tamping shape. Designed for all types of soil wheel size 7- 45 ton.

DOZER is a tractor unit that has a blade attached to its front which used to push, shear, cut and roll material ahead of dozer. It may be used for operation such as:-

1- Moving earth or rock short haul (push) distance up to 300 ft - 90m.
2- Spreading earth or rock fills.
3- Backfilling drenches.
4- Opening up pilot roads through mountains or rocky terrain.
5- Clearing the floors of borrow and quarry pits.
6- Helping load tractor - pulled scrapers.
7- Clearing land of timber, stumps and root mat.

Example 15: What is the unit cost for pushing the silty sand by a track- type dozer? if

- **Push speed 2 mph, Return speed 4 mph.**
- **Straight blade (3.42×1.5) yr.**
- **Average push distance 90 ft.**
- **Swell 25% , efficiency 50 min-hr.**
- **Operating and Operator (O&O) cost = $ 40.5 /hr.**
- **Paid wage = $ 15.5 / hr.**

Solution:

$$\text{Push time} = \frac{90\text{ ft}}{2} \times \frac{60}{5{,}280} = 0.51\text{min}$$

$$\text{Return time} = \frac{90\text{ ft}}{4} \times \frac{60}{5{,}280} = 0.26\text{ min} + 0.05\text{min (acceleration)} = 0.31\text{ min}$$

$$\text{Production} = \frac{60\text{ min}\times\text{blade load}}{\text{Push Time (min)}+\text{Return Time (min)}+\text{manuver Time (min)}}$$

$$= \frac{60\text{ min}\times(0.8\times3.42\times1.5^2)}{0.51+0.31+0.05} = 424\text{ lcy / hr.}$$

$$\text{Production} = \frac{424}{1.25} \times \frac{50}{60} = 283\text{ bcy / hr.} \approx 283\text{ bcy / hr.}$$

$$\text{Unit cost} = \frac{\$\,40.5+\$\,15.5}{280\text{ bcy/hr}} = \$\,0.20\text{ per bcy}$$

Example 16: Use figure (7.13 -14) and table 7.2 to find production of track- type dozer? if

- **Bank weight material 108 pcf, swell 12 % (dry non cohesive material)**
- **Operator average skill**
- **Slot dozing, good visibility, working 50 min-hr.**
- **D7G is a power shift tractor – working -10 grade.**
- **Push speed 2 mph, Return speed 4 mph.**
- **Straight blade**
- **Operating and Operator (O&O) cost = $ 32.5 /hr. and $ 14.85 / hr.**
- **Distance of bushy 350 ft – 105 m.**

Solution

Ideal production = 170 bcy / hr.

Material weight correction factor (loose weight) = $\frac{108 \times 27}{1.12}$ = 2,603.57 Ib / lcy. ≈2,604 Ib / lcy

Material weight factor = $\frac{2,300}{2,604}$ = 0.88

Operator factor = 0.75

Operating- Technique Correction factor (slot dozing) = 1.2

Material Type Correction factor (dry non cohesive) = 0.8

Visibility Correction factor = 1.0

Efficiency factor (50 /60) = 0.83

Machine Transmission factor (D7 G) = 1.0

Blade Adjustment factor= 1.0

Grade Correction factor (-10 grade favorable) = 1.25

- Production Correction factors = 0.88 ×0.75×0.8×1.2×1.0×0.83×1.0×1.0×1.25= 0.652

Production = 170 × 0.652 = 110.84 ≈ 111 lcy / hr.

Production =$\frac{111 \text{ lcy /hr}}{1.12}$ = 99. 1 bcy / hr.

Direct Production Cost = $\frac{\text{Cost}}{\text{Quantity}} = \frac{(32.5+14.85)\$/\text{hr.}}{99.1 \text{ bcy/ hr.}}$ = $ 0.58 / bcy / hr.

Compaction Equipment:-

The reason for compaction is to improve soil properties to:-

- Reduce or prevent settlement
- Increase strength.
- Improved bearing capacity
- Control volume changes
- Lower permeability

Type of Compaction:-

1- Sheep foot rollers.
2- Tamping rollers.
3- Smooth – dram vibratory soil compactors.
4- Pneumatic – tired rollers
5- Compacted wheels.
6- Manually operated vibratory – plate compactors.
7- Manually operated Rammer compactors.

Applying Energy to Soil by One of More of Following Methods:-

1- Impact – Sharp blow
2- Pressure – Static weight
3- Vibration – Shaking
4- Kneading – Manipulation or rearranging

SCRAPERS

It best suited for haul distance greater than 500 ft but less than 300 ft is case of very large unite maximum distance can approach a mile. Loose heaped capacity up to 44 cy in past 100 cy greater speed 35 mph when fully loaded.

Scrapers Types

1- Pusher Loaded
- a- Single – Powered Axle
- b- Tandem – Powered Axle

2- Self –Loading
- a- Push –Pull –Tandem –Powered Axle
- b- Elevating
- c- Auger

Single – Powered axle It is uneconomical when
- Haul grade > 5 %
- Return grade > 12 %

Tandem Cost 25% > Single

Two engine fraction + bowl

Elevating: weight of elevator loading assembly is dead weight economic in short – haul situation $\frac{\text{haul t}}{\text{load t}}$ is low no pusher is required.

Augur: in difficult condition [laminated rock – granular materials- frozen material]

44 cy capacity ⟹ 3-5 in deep cuts in 1.5 minutes.

Example 17: compute the production if scraper that its specification explains in table 8.1, also find the unit cost of move material, if the following information are available:-

- **The total length of haul is 4000 in three segment as shown below.**
- **Efficiency factor is 50 min-hr.**
- **Soil unit weight 3000 Ib / bcy**
- **Average loading time 0.85 min (96% heaped capacity)**
- **Rolling Resistance 80 Ib / ton**
- **Operating & Operator wages (O&O) cost of scraper $ 89, and of push tractor $ 105**
- **Scraper operator $ 12 / hr. – pusher operator $ 20 / hr.**

Solution

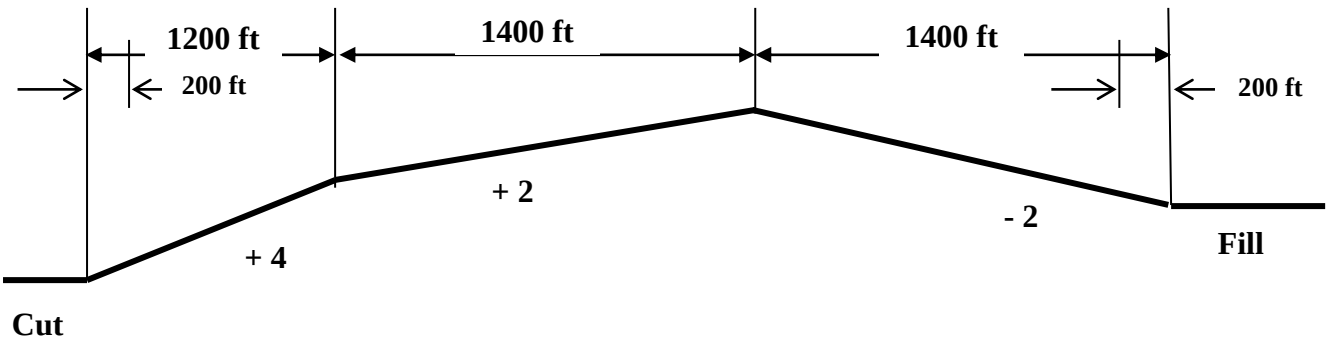

From table 8.1 ⟹ Empty weight 96,880 Ib
Heaped capacity 31 cy

From figure 8-12 expected load = 96 % of heaped capacity

Load volume = 0.96 × 31= 29.8 Lcy

Load volume in Bank = 29.8 ×0.74 ×1.1 = 24.3 Bcy

Weight of load = 24.3 bcy × 3,000 Ib / bcy = 72,900 Ib

Gross weight (GW) = 72,900 + 96,880 Ib

Cycle time = load + haul + dump + turn + return + turn

Haul

Distance (ft)	R.R	G.R	T.R	Rimpull (Ib)	Speed (mph)	Time (min)
200	4	4	8	13,582	5	0.45
1,000	4	4	8	13,582	10	1.14
1,400	4	2	6	10,187	14	1.14
1,200	4	-2	2	3,396	32	0.43
200	4	-2	2	3,396	16	0.14

Return

Distance (ft)	R.R	G.R	T.R	Rimpull (Ib)	Speed (mph)	Time (min)
200	4	2	6	5,813	11	0.21
1,200	4	2	6	5,813	23	0.59
1,400	4	-2	2	1,938	33	0.48
1,200	4	-4	0	0	33	0.34
200	4	-4	0	0	16	0.14

Dump time = 0.37 min from table 8-7

Turn to fill ⟹ 0.2 min.

Turn to cut ⟹ 0.3 min.

❖ cycle time = 5.03+ 0.85 + 0.37 + 0.21 + 0.3 = 6.76 min.

Crawler tractor time (T.P) = 1.4×0.85 + 0.25= 1.4 min.

Balance fleet

No. of scrapers ⟹ $N = \frac{TS}{TP} = \frac{6.76}{1.4} = 4.7$

Production:-

No. of scraper ; If it is less than balance fleet

Production = $\frac{\text{Efficiency}}{\frac{c}{t}\text{ of Scrapers}}$ × No. of scrapers × volume per load

Or if is greater than balance fleet, the

Production = $\frac{\text{Efficiency}}{\frac{c}{t}\text{ of Pushers}}$ × volume per load

If the No. of scrapers is 4, the production will

Production = $\frac{50\text{ min./hr}}{6.76\text{ min.}}$ ×4 ×24.3 = 719 bcy / hr.

If the No. of scrapers is 5, the production will

Production = $\frac{50\text{ min./hr}}{1.44\text{ min.}}$ ×24.3 = 844 bcy / hr.

The cost for Operating

If 4 scrapers; the Cost per hour = 4 × (89+12) + (105+20) = $ 529 / hr.

❖ Unit cost to move the material by 4 scrapers $= \frac{529}{719}$ = $ 0.736 / bcy

If 5 scrapers; the cost per hour = 5 × (89+12) + (105+20) = $ 630 / hr.

❖ Unit cost to move the material by 5 Scrapers $= \frac{630}{844}$ = $ 0.746 / bcy

Operational Condition

1- Ripping.
2- Hauling Rock.
3- Rewetting the Soil.
4- Loading Down grade.
5- Dumping Operation.
6- Supervision.

Example 18: Analyze the probable scraper production and how many scrapers should be used if the following information are available:-

The material to be hauled is dry clay, 2,800 Ib per bcy. The expected rolling resistance for the haul road is 50 kg / ton.

Assume a 0.8 –min load time and average loading capacity of 86% heaped capacity. Acceleration and deceleration at an average speed of 5 mph over distance of 200 ft. use 50-min / hour efficiency factor. The total haul distance from cut to fill is (600 ft – 3% grade),(800 ft- 2% grade) and (1900 ft -0 grade).

Empty weight 96,880 Ib and the Heaped weight is 3,109 Ib.

Solution

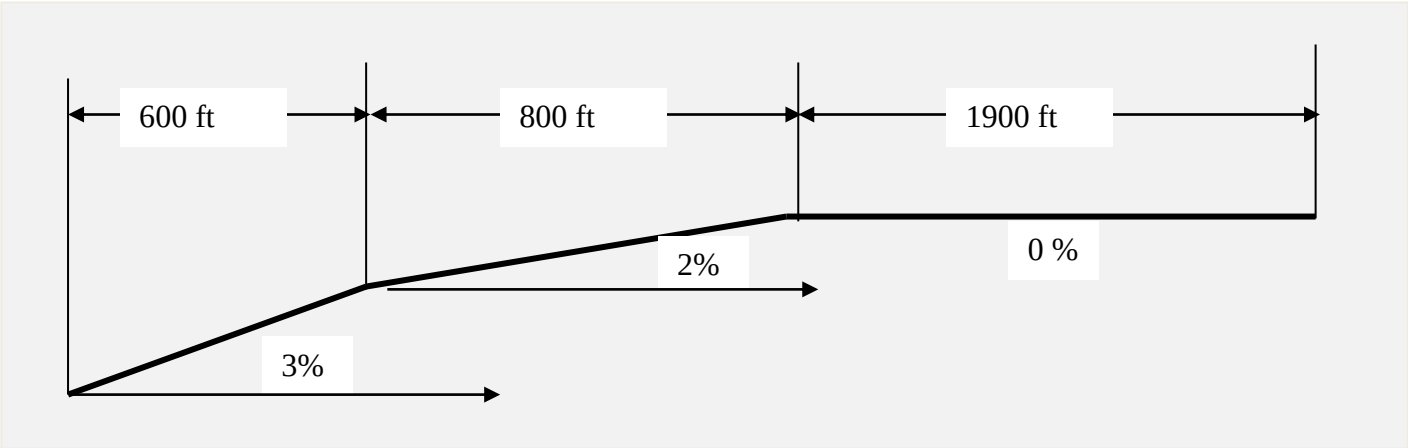

Haul volume = 0.88 ×31= 26.66 cy

Load volume in bank = 26.66 ×0.74 ×1.1= 21.723

Weight of load= 21.723 × 2,800 = 60,824.3

Gross weight (G.W) = 60,824 + 96,880 = 15, 7704.3 Ib.

Haul

Distance (ft)	R.R	G.R	T.R	Speed (mph)	Time (min)
200	5	3	8	5	0.45
400	5	3	8	12	0.38
800	5	2	7	13	0.7
1,700	5	0	5	19	1.02
200	5	0	5	5	0.45

Return

Distance (ft)	R.R	G.R	T.R	Speed (mph)	Time (min)
200	5	0	5	5	0.45
1,700	5	0	5	43	0.72
800	5	-2	3	53	0.17
400	5	-3	2	55	0.08
200	5	-3	2	5	0.45
					∑ 1.87

Cycle Time = 3.0+ 1.87+ 0.3+0.21+ 0.37+0.8 = 6.85 min

Crawler track = 1.4 ×L1+ 0.25 = 1.4 ×0.8 +0.25= 1.378 min.

Balance fleet = N = $\frac{6.85}{1.378} = 4.97 \approx 5$ use 5

Production = $\frac{50}{1.378} \times 21.723 = 788.2$ cy/hr

= $\frac{50}{6.85} \times 21.723 = 792.8$ cy/hr

EXCAVATORS

Hydraulic Excavators: they may be crawler or pneumatic tire- carrier – mounted. The advantages offered by these machines are as follow:-

- Faster cycle time.
- Positive control of attachments
- Precise control of attachments
- High overall efficiency.
- Smoothness and ease of operation.

It is production rate can be estimated using the following steps:-

Step 1: Obtain the heaped bucket load volume (manufacturers data)

Step 2: Apply a bucket fill factor based on the type of machine and class material.

Step 3: Estimate peak cycle time.

Step 4: Apply an efficiency factor.

Step 5: Conform the production units to the desired volume or weight unit.

Step 6: calculate the production rate.

$$\text{Production} = \frac{3{,}600\ \text{sec} \times Q \times F \times (AS{:}D)}{t} \times \frac{E}{60\ \text{min}-\text{hr}} \times \frac{1}{\text{volume correction}}$$

Front Shovel : are used predominantly for hard digging above track level and for load haul units. (loading of sat rock), shovel are capable of developing high break out force with the bucket.

Calculating Shovel Production:-

There are four elements in the production cycle of a shovel.

1. Loading bucket 7-9 sec.
2. Swing with load 4-6 sec.
3. Dump load 2-4 sec.
4. Return swing 4-5 sec.

The actual production of shovel is affected by numerous factors, including the:-

1- Class of Material
2- High of Cut
3- Angle of Swing
4- Operator Skill

5- Condition of Shovel

6- Haul – unit Exchange

7- Size of Hauling Exchange

8- Handling of oversize material

9- Cleanup of loading area

- High of cut effected on shovel production
- Angle of swing effected on shovel production

- ***Transportation Research Broad (T.R.B) studies have shown that the actual production times for shovels used in highway construction excavation operation are 50 % - 75 % of available working time (30 – 45) min.***

Example 19: A contractor has both a 3-cy shovel in the equipment fleet. Select the minimum –size shovel that will excavate 450,000 bcy of common earth in a minimum of 120 working days of 10 hrs. each. The average height of excavation will be 18 ft, and average angle of swing will be 80 degrees. The 3-cy shovel has a maximum digging height of 30 ft and the 5 cy machine's maximum digging height is 34 ft. The efficiency factor will be a 50 min- hr. Appropriate – size haul unit can be used with either shovel. How many days will it required to complete the work?

Solution

Production required = $\frac{450,000}{120 \times 10} \times 1.25 = 468.75$ lcy = 375 bcy

Check 3 cy $\Longrightarrow$ 0.11 factor = 100 Cycle time 21 Sec.

Average height of excavation = 18 ft
Optimum depth = $\frac{30}{2}$ = 15 ft
$\Longrightarrow$ $\frac{18}{15} = 1.2$

(AS:D) 9.2 $\Longrightarrow$ 101%

❖ Production = $\frac{3,600 \times 3 \times 1.0 \times 1.01}{21} \times \frac{50}{60} \times \frac{1}{1.25}$ = 346.285 <375 Ib not satisfied

Check 5 cy

Optimum depth = $\frac{34}{2}$ = 17 $\Longrightarrow$ Percentage of Optimum depth = $\frac{18}{17}$ = 106 %

❖ Production = $\frac{3{,}600 \times 5 \times 1.0 \times 1.03}{21} \times \frac{50}{60} \times \frac{1}{1.25}$ = 588.57 < 375 Ib not satisfied

No. of days = $\frac{450{,}000}{588.57 \times 10}$ = 76.45 ≈ 77 days.

Example 20: A shovel having a 5 cy bucket whose cost per hour including the wages to an operator, is $ 96 will excavate well- blasted rock and load trucks under each of stated conditions. The maximum digging height of the machine is 35 ft. Determine the cost per cubic yard for each condition?

Condition	1	2	3	4
Height of excavation	10.2	20.5	23.7	27.3
Average of swing (degrees)	75	90	120	185
Efficiency factor (min. per hr.)	40	45	30	50

1- Fill factor ⟹ 90 – 100 ≈ 95%

Optimum height = $\frac{35}{2}$ = 17.5 ft.

Optimum Percent of height = $\frac{10.2}{17.5}$ = 0.58 ≈ 60%

❖ AS:D = 0.95

❖ Production = $\frac{3{,}600 \times 5 \times 0.95 \times 0.95}{21} \times \frac{40}{60} \times \frac{1}{1+0.6}$ = 322.32 bcy

Example 21-A: Consider (12 cy and 24 cy) trucks loaded by a 3-cy shovel excavating good common earth with 90° swing with a 20 sec. cycle time, the time for travel cycle which includes traveling to dump, dumping, and returning to the shovel will be 6 min for 12 cy and 7.2 min for 24 cy. Efficiency 45 min / hr. Wage of trucks 15 $ / hr. for 12 cy and 25 $/ hr. for 24cy. The wage of excavator is 80 $ / hr.

Solution

- For 12 cy

No. of bucket to fill truck = $\frac{12\text{ cy}}{3\text{cy}}$ = 4 bucket

Loading time = 4 × 20 = 80 sec. ≈ 1.33 min.

Cycle time = 6+ 1.33 = 7.33 min.

The balance fleet of trucks = $\frac{7.33}{1.33}$ = 5.51 trucks.

Five trucks:-

Probable production = $\frac{45}{7.33}$ x5x12 = 368. 35 cy / hr.

- Cost / cy = $\frac{5\times15+80}{368.35}$ = 0.421 $ / cy

Six trucks:-

Probable production = $\frac{45}{1.33}\times 12$ = 406.015 cy / hr.

- Cost / cy = $\frac{6\times15+80}{406.015}$ = 0.419 $ / cy

- For 24 cy

No. of bucket to fill truck = $\frac{24\ cy}{3cy}$ = 8 bucket

Loading time = 8 ×20 = 160 sec. ≈ 2.67 min.

The cycle time = 7.2 + 2.67 = 9.87 min.

- The required Volume of truck = $\frac{9.87}{2.67}$ = 3.7 trucks

Three trucks:-

Probable production = $\frac{45}{9.87}\times 3\times 24$ = 328.267 cy / hr.

- Cost / cy = $\frac{25\times3+80}{328.267}$ = 0.472 $ / cy

Four trucks:-

Probable production = $\frac{45}{2.67}\times 24$ = 404.494 cy / hr.

- Cost / cy = $\frac{4\times25+80}{404.494}$ = 0.445 $ / cy.

- Choose (6) six trucks of size (12) cy.

HOES

HOES: are used primarily to excavate below the natural surface of the ground on which the machine rests.

The following points must consider in the selection of a hoe:-

- Maximum excavation depth required.

- Maximum working radius required for digging and dumping
- Maximum dumping height required
- Hosting capacity required.

Multipurpose tool plat form

- Rock drills, each augers, grapples, for lard cleaning
- Impact hammers
- Demolition Jaws
- Vibratory – plate compactors

In Calculating Hoe Production

HOE cycle times are approximately 20 % longer in duration than those of a similar – size shovel (fully extended to dump the bucket).

As a rule, the optimum depth of cut for a hoe is usually in the range of (30%-60%) of machine's maximum digging depth.

Example 21 - B: Analyzes the performance of a fleet of 22 ton – dump trucks being loaded by hydraulic hoe having a 3 cy bucket. Capacity Struck 14.7 cy, Heaped 2:1 18.3 cy. The net weight empty = 36,860 Ib. play load (sand clay material 2,150 Ib. / cy) = 44,000. Gross vehicle weight = 80,860 Ib. haul rout 3 mik, downhill grade of 1% . Dump time 2 min. Hoe $^{c}/_{t}$ = 20 sec.

Example 22: A crawler hoe having a $3\frac{1}{2}$ cy bucket is being considered for use on a project to excavate very hard clay from borrow pit. The clay will be loaded into trucks having a loading height of 9 ft 9 in. soil- boring information indicates that below 8 ft. the material changes to an unacceptable silt material.

What is the estimated production of the hoe in cubic yards bank measure, if the efficiency factor equal to 50 min- hour? Swell 35%.

Solution:-

- Size of bucket is $3\frac{1}{2}$ cy.
- Bucket fill factor 80-90% use average 85% (table 9.4)
- Optimum depth checking

  Optimum depth of cut is 30- 60% of maximum digging depth is 23 to 27 ft.

  $\frac{8\text{ ft}}{23} \times 100 = 34\ \% \geq 30$ okay

  $\frac{8\text{ ft}}{27} \times 100 = 30\ \% \geq 30$ okay

  Table 9.5 cycle time is
- Loaded bucket = 7 sec.

- Swing with load = 6 sec.
- Dump load = 4 sec.
- Return swing = 5 sec.

Cycle time = 22 sec.

Production = $\frac{3{,}600 \times 3.5 \times 0.85}{22} \times \frac{50}{60} \times \frac{1}{1+0.35}$ = 300 bcy / hr.

Maximum loading height is 21 ft > 9 ft 9 in. O.K table 9.3

LOADER

Loader is used extensively in construction work to handle and transport bulk material, such as earth and rock, to load trucks; to excavate earth; and to change aggregate bins at asphalt and concrete plant.

There are two types of loaders, classified on the basis of running gear:-

1- The crawler tractor – mounted type (to increase stability during load lifting trenches of crawler are longer 8)
2- The wheel – tractor – mounted type (may be steered by the rear wheels or they may be articulated)

Loader buckets / attachments

- General Purpose
- Multi purpose
- Rock
- Side dump
- Fork lift
- Other

The rated capacity of loader buckets is expressed in cubic yards for all size 3/4 cy or over

If cf ⟶ < 3/4 cy.

Speed of loader 80% of speed if distance < 100 ft.

if distance < 100 ft. 60% return.

if more than 100 ft. 80% for travel and return.

Wheel operating load = 50% static load

Track operating load = 35 % static load

Example 23: A 4 cy wheel loader will be used to load trucks from a quarry stockpile processed aggregate having a maximum size of $1\frac{1}{4}$ in. The haul distance will be negligible. The aggregate has a loose unit weight of 3,100 Ib / cy. Estimate the loader production in ton based on a 50-min/ hr. efficiency factor. Use conservative fill factor.

Solution:

- Size of bucket 4 cy
- Bucket fill factor 85 % - 90% ≈ use 85% table 9.6
- Load weight 4 x 0.85 x 3,100 = 10,540 Ib actual load
  Machine static tipping load at full turn is 25,000 Ib
  Operating load (50 % of static tipping full turn)
  = 0.5 × 25,000 = 12,500 Ib > 10,540 Ib actual load
- Fixed time = 30 -33 sec. use 30 sec. table 9.10

- Production = $\frac{3{,}600 \times 4 \times 0.85}{30} \times \frac{50}{60} \times \frac{3{,}100}{2{,}000}$ = 527 ton / cy.

Example 24: A 4 cy wheel loader will be used to charge the aggregate bins of an asphalt plant that is located at the quarry, the one way haul distance from the $1\frac{1}{4}$ in. aggregate stockpile to the cold bins of the plant is 22o ft. the asphalt plant uses 105 ton per hour of $1\frac{1}{4}$ in. aggregate. Can the loader meet this requirement?

- Cycle time ⟶ fixed time 30 sec. Table 9.10
- Table 9.8 / travel speed 4.3 -7.7 – 13.3 mph.
- Reverse speed 4.9 – 8.6 - 14.9 mph.

Haul = $\frac{4.3 \text{ mph} \times 0.8 \times 88 \text{ fmp/mph}}{60 \text{ sec./min}}$ = 5.0 ft. / sec.

Return = $\frac{7.7 \text{ mph} \times 0.8 \times 88 \text{ fmp/mph}}{60 \text{ sec./min}}$ = 9.0 ft. / sec.

Travel with load ⟶ $\frac{220}{5}$ = 44 sec. First gear

Return travel ⟶ $\frac{220}{9}$ = 24 sec. Second gear

Fixed time = 30 sec.

Total = 98 sec. Cycle time

Production = $\frac{3{,}600 \times 4 \times 0.85}{98} \times \frac{50}{60} \times \frac{3{,}100}{2{,}000}$ = 161 ton / hr. > 105 ton / hr.

Example 25: A 2 cy track loader is used to load tracks from a bank of moist loam, this operation will require that the loader travel 30 ft. for both the haul and return (forward). Estimate the loader production in bcy based on a 50 min-hr. efficiency factor use a conservative fixed time. Swell 25%?

Solution

- Size 2 cy
- Bucket fill factor 100 % -120 % ≈ use average 110%
- Check chipping

  Actual load = 2.0 × 1.1 × 2,580 = 5,676 Ib.

  Operating load = 35% of static tipping

  = 0.35 × 19,000 = 6,650 Ib > 5,676 Ib O.K
- Cycle time

  Fixed time = 15 ~ 21 use 21 sec. conservative table 9.10

Travel loaded speed = $\frac{1.9 \text{ mph} \times 0.8 \times 88 \text{ fmp /mph}}{60 \text{ sec./min}}$ = 2.2 ft / sec.

Return empty speed = $\frac{2.9 \text{ mph} \times 0.6 \times 88 \text{ fmp /mph}}{60 \text{ sec./min}}$ = 2.6 ft / sec.

Travel with load = $\frac{30}{2.2}$ = 13 sec.

Return travel = $\frac{30}{2.6}$ = 12 sec.

Fixed time = 21 sec.

The total cycle time = 46 sec.

Production = $\frac{3{,}600 \times 2 \times 1.1}{47} \times \frac{50}{60} \times \frac{1}{1.25}$ = 112.3 bcy / hr.

Example 26: An off- highway truck weight 70,000 Ib. and 150,000 Ib. when loaded. The truck works an 8 hr. shift, hauling rock to a crusher. The one-way haul distance is 5.5 miles. Truck can make 14 trips per day. Calculate the job TMPH value.

	No.	Empty %	Load %
Front	**2**	**50%**	**33%**
Rear	**4**	**50%**	**67%**

Solution

	Weight empty	Weight loaded	individual	Average	Average speed	Job TMPH
Front	70,000 × 0.5 35,000	150,000 × 0.33 50,000	17,500 25,000	21,250 10.6 ton	$\frac{2 \times 5.5 \times 14}{8} = 19.25$	10.6× 19.25= 204. 05
Rear	35,000	150,000×0.67 100,000				

DRAGLINE

It handle the material that range from soft to medium hard, it's long reach for digging and dump.

Draglines: are used to excavate material and load it in hauling units or deposit it in levees, spoil, pits. It designed to excavate below the level of machine and doesn't have to go in the excavation or pits.

Dragline: is a capable of a wide range of operation, the factor which affect the production of Dragline are:-

- Type of material being excavated.
- Depth of cut (below tracks)
- Angle of swing
- Size and type bucket
- Length of boom
- Method of deposal, casting or loading haul units.
- Size of hauling units when used.
- Skill of operator.
- Physical conditions of machine.
- Job condition.

Dragline Buckets:-

In selecting the size and type of dragline bucket to use on project, one should match the size of lattice – boom crane and bucket property to obtain the best action and greatest operating efficiency. A dragline bucket consists of three parts [basket – arch – cutting edge]. It's generally available in three types:-

1- Light duty: - for easy digging such as loom, sandy clay, or sand.

2- Medium duty: - for general excavating service including excavating clay soft shale, or loose gravel.
3- Heavy duty:- for heavy construction and for maximum strength and resistance to abrasion- such as min stripping handling blasted rock, and highly

Calculating Dragline Production

Step 1 : Determine an ideal production table 18.3

Step 2 : Determine the percent of optimum depth 18.3

Step 3 : Determine the depth of cut / swing angle correction factor table 18.4

Step 4 Determine an overall efficiency factor / based on the expected job condition – more than 45 min / hr.

Step 5: Determine estimated production rate. Multiply the ideal production by the depth / swing correction factor and the efficiency factor.

Step 6: Determine soil conversion, if needed (4.3)

Step 7: Determine total hour to complete the work

$$\text{Total hours} = \frac{\text{Cubic Yards moved}}{\text{Production rate/hr.}}$$

Example 27: A 2 cy short – boom dragline is used to excavate hard, tough clay. The depth of cut will be 15.4 ft and the swing angle will be 120°. Determine the probable production of the dragline. There are 35,000 bcy of material to be excavated. How long will project required?

Solution

Step 1 : Determine an ideal production table 18.3

2-cy bucket size – hard tough clay production 195 bcy.

Step 2 : Determine the percent of optimum depth 18.3

Percent of optimum depth of cut table 18.3 $= \frac{15.4}{11.8} \times 100 = 130\ \%$

Step 3 : Determine the depth of cut / swing angle correction factor table 18.4

Depth of cut / swing angle correction factor = 0.89

Step 5: efficiency factor $= \frac{45}{60} = 0.75$

Step 6: Production = 195 × 0.89 × 0.75 = 130 bcy / hr.

Step 7: Total hours = $\frac{35{,}000}{130\ \text{bcy}}$ = 269 hours.

CLAMSHELL EXCAVATORS

It is a vertical operated bucket capable of working at above and below the ground level the bucket consists of two scoops hinged together that work like the shell of clam.

Used primary to handle material, sand, gravel, crashed stone, and remove material from vertical excavator cofferdams, trench, pier foundation, manholes ……

Example 28: Clamshell bucket weight is 4,300 Ib will be used to transfer sand from a stockpile into a hopper 25 ft above the ground. The crane's angle of swing will average 90°. The average loose capacity of the bucket is 48 cf. the specifications for the crane unit given in table 18.6 are applicable to this situation.
Travel speed 0.9 mph – swing speed 3 rpm – lift speed 166 fpm
Lower speed = 350 ft / min – loading time 6 sec. – Dump load 6 sec.
Solution:-

Loading bucket 6 sec.

Lift and swing loaded = $\frac{25\ \text{ft} \times 60\ \text{sec/min}}{166\ \text{ft/min}}$ = 9 sec.

Dump load 6 sec.
Swing bucket to stockpile = 4 sec.

Lost time accelerating = 4 sec.

The total = 29 sec. ≈ 0.48 min.

Maximum number of cycles / hr = $\frac{60\ \text{min}}{0.48\ \text{mincycle}}$ = 125

Maximum volume per hr. = $\frac{125\ \text{cycle} \times 48\ \text{cf}}{27}$ = 222 cy Loose

Probable production will =222 × $\frac{45}{60}$ = 167 cy / hr. loose.

If the same clamshell with 33 cf bucket volume used to remove dredge sand from sheet piling cofferdam partly filled with water, requiring total vertical lift of 40 ft, discharged into a barge.

Loading bucket = 8.0 sec.

Lifting = $\frac{40 \text{ ft} \times 60 \text{ sec./min}}{166 \text{ ft/min}}$ = 14.5 ≈ 15 sec.

Swing angle 90° at 3 rpm

$\frac{0.25 \times 60}{3}$ = = 5 sec.

Dump load = 4 sec.

Swing bucket = 4 sec.

Lower bucket

$\frac{40 \text{ ft} \times 60 \text{ sec./min}}{350 \text{ ft/min}}$ = 7 sec.

The total = 53 sec. ≈0.875 min.

No. of cycle = $\frac{60}{0.875 \approx 0.9 \text{ min}}$ = 67

Maximum volume per hour = $\frac{67 \times 33 \text{ cf}}{27}$ = 82 cy Loose

Probable Production = $\frac{82 \times 45}{60}$ = 62 lcy / hr.

<u>Example 29</u>: consider using 2 cy medium – duty bucket to handle material 90 Ib / cf (loose) if the crane boom is 80 ft at a 40° angle find also the maximum size of bucket if length of boom is 70 ft.?

<u>Solution</u>

Maximum safe load 8,600 Ib table 18.1

The approximate weight of bucket at its load = Bucket weight + Earth weight

= $\underbrace{4{,}825}_{\text{Table } 18.5}$ + $\underbrace{5{,}400}_{60 \times 90}$ = 10,225 Ib combined load > 8,600 Ib maximum safe load

❖ use smaller bucket try with $1^3/_4$ cy.

Combined load = 4,030 + $\overbrace{4,770}^{53 \times 90}$ = 8,800 > 8,600 exceeded the allowable limits.

Use bucket with $1^1/_2$ cy.

Combined load = 3,750 + $\overbrace{4,230}^{47 \times 90}$ = 7,980 Ib <8,600 Ib not exceeded if suitable .

<u>Example 30</u>: Determine the size of crawler mounted dragline required for digging 210,000 bcy of common earth the material will be cast into levee along one side of the canal from edge of canal on 64 ft. earth swell 25%, efficiency 45 min. / hr. boom angle 30° the schedule of work referred to finish in one year where only 44 week / year the contractor could work and 40 hr. / week. The average of swing angle 150°?

<u>Solution</u>

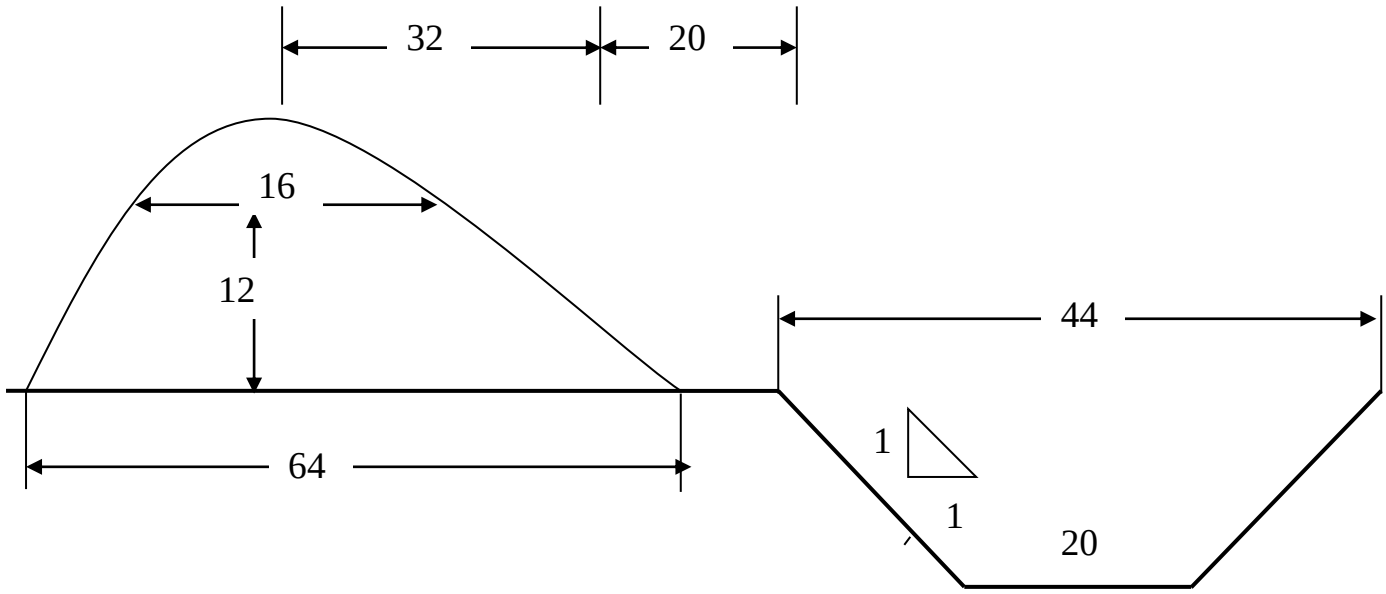

The required production / hr. = $\frac{210,000}{44 \times 40}$ = 119.3 bcy.

From table 18.1 with angle 30° ⟹ the boom length is 70 ft.

Assume depth –swing factor = 0.81

Required production = ideal production × depth – swing factor × efficiency

119.3 = ideal production $\times 0.80 \times \frac{45}{60}$

Ideal Production = 198.83 Ib.

Check 2 two sizes ⟹ $1^1/_2$ cy. and $1^1/_3$ cy.

For $1^1/_2$ cy. ⟹ 47 × 80 + 3,750 = 7,510 < 9,200 O.K

Production ⟹ Percent of Optimum depth = $\frac{12}{9} \times 100$ = 133 %

- depth – swing factor ≈ 0.81

- Production = 190 × 0.81 × 0.75 = 115 cy. < 119.3 cy (required).

Not suitable to use

Try to use size $1^1/_3$ cy. ⟹ 53 × 80 × 4,030 = 8,270 Ib. < 9,200 O.K

Percent of optimum depth = $\frac{12}{9.5} \times 100$ = 126 %

- depth – swing factor ≈ 0.82

- Production output = 210 × 0.82 × 0.75 = 129.2 bcy. > 119.3 cy (required).

Trucks and Hauling Equipment:

Trucks are hauling units that provide relatively low hauling cost because of their high travel speed. The productive capacity of a truck depends on the size of its load and the number of trips can make in an hour. Truck cycle time has four components (load time – haul time – dump time – and return time).

Truck can be classified by many factors, including:

1- The method of dumping the load (rear – dump, bottom - dump, side – dump).
2- The type of frame (rigid frame or articulated).
3- The size and type of engine (gasoline, diesel butane or propane).
4- The kind of drive (two wheels, four wheels, or six wheels).

5- The number of wheel and axles and arrangement of driving wheel)
6- The class of material hauled (earth, rock, coal, or ore).
7- The capacity (gravimetric (tons) or volumetric (cubic yards).

Rigid -Frame Rear Dump Truck:

It's suitable for use in hauling many types of materials but when it use for hauling rock will required a heavy duty rock body made high –tensile strength steel. Off-highway dump trucks don't have tail gates and the body floor slop upward at a slight angle toward the rear (less than 15°)

(V) bottom used to reduce the shock of loading and center the load.

Articulated Rear- Dump Truck:

It designed to operate through high – rolling resistance material and in confined working location. It maintains contact with the ground at all time. It can climb steeper grade (up 35%) than rigid – frame truck (only up 20% for short distance and 8- 10% for continuous grades).

Tractors with bottom - Dump Trailers:

They are economic haulers by reduce the time required to unload material, when the material to be moved is free flowing such as sand, gravel and reasonable dry earth.

Capacities of Trucks and Hauling Equipment

There are at least three methods of rating capacities of trucks and wagons:-

1- Gravimetric:- the load it will carry, expressed as a weight.
2- Struck volume:- the volumetric amount it will carry if the load is water level in the body.
3- Heaped volume:- the volumetric amount it will carry if the load is heaped on a 2:1 slop above body.

Truck Size affects Productivity:-

The size of the truck cargo body introduce several factors, which affect the production rate and the cost of handling the material

Small Trucks

Advantages	Disadvantages
Maneuvering flexibility	Number, more trucks increase operational dangers in the pit.
Speed, can achieve higher haul and return speeds.	More drivers required.
Production, little impact it one truck breaks down.	Small target for excavator
Balance of fleet, easy to match number of trucks to excavator production.	Positioning time

Large Trucks

Advantages	Disadvantages
Number, fewer needed for given and output.	Cost of truck time at loading greater.
Driver required, fewer needed for a given output.	Loads heavier.
Loading advantage, large target for excavator bucket.	Balance of fleet, difficult to match number.
Positioning time, frequency of spotting trucks is reduced.	Size, may not be permitted to haul on highways.